THIS DRAWING IS UNPUBLISHED. RELEASED FOR PUBLICATION
© COPYRIGHT 19 BY AMP INCORPORATED. ALL RIGHTS RESERVED.

LOC	DIST
AP	-

DO NOT REVISE EXCEPT BY CAD

REVISIONS

P	LTR	DESCRIPTION	DATE	DWN	APVD
	B	REDRAWN WO CHANGE EC407/99	07JAN00	NCL	PLF
	B1	REVISED PER ECO-10-000445	09JAN10	KK	AEG

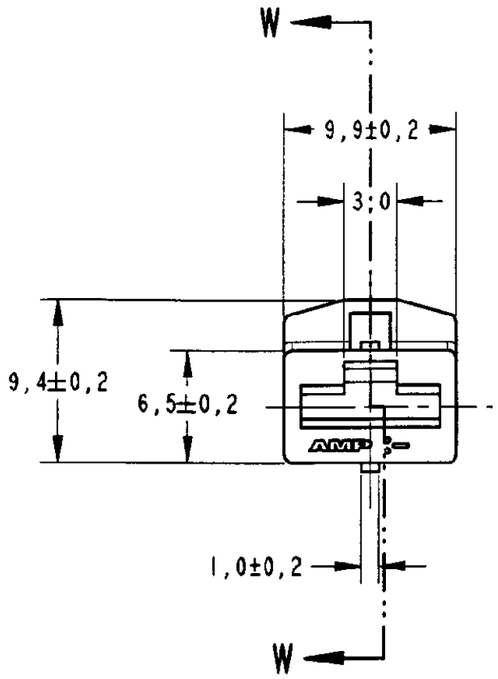

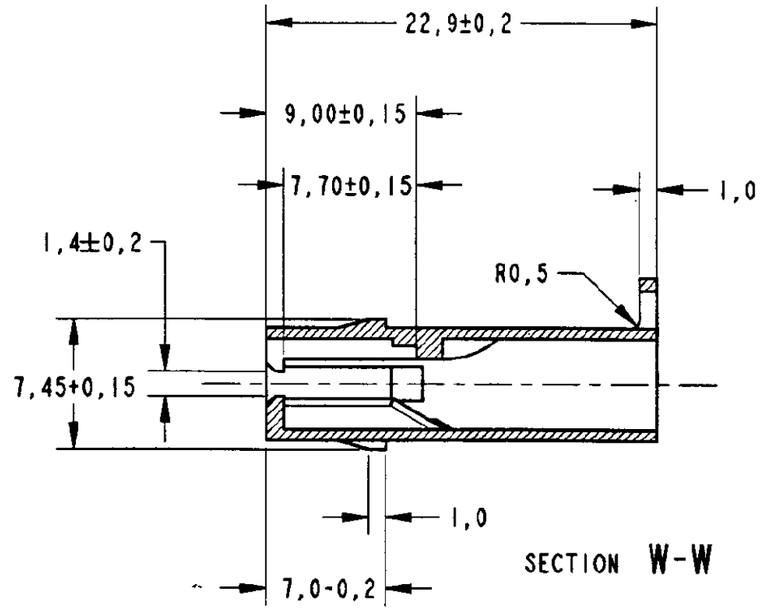

SECTION W-W

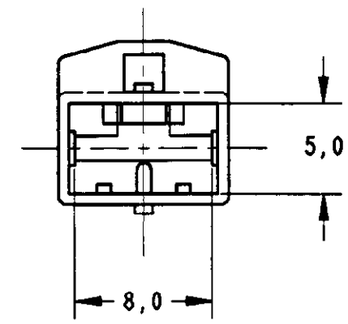

GRAVAÇÃO MARKING
LOGOTIPO AMP AMP LOGO
CÓDIGO PAÍS PRODUTOR MANUFACTURER COUNTRY CODE
NÚMERO CAVIDADE CAVITY NUMBER

1 - INTERCAMBIÁVEL COM PN 180905
- INTERCHANGEABLE WITH PN 180905

2 OBSOLETE PARTS: OBSOLETE CIS STREAMLINING PER D.RENAUD/D.SINISI

	RAW MAT'L NO	FINISH	MATERIAL	PART NUMBER
	—	LARANJA/ORANGE		-9
	—	VIOLETA/VIOLET		-8
	—	CINZA/GRAY		-7
	—	MARROM/BROWN		-6
2 OBSOLETE	—	PRETO/BLACK		~~-5~~
	—	AMARELO/YELLOW		-4
	—	AZUL/BLUE		-3
2 OBSOLETE	—	VERDE/GREEN		~~-2~~
	—	VERMELHO/RED		-1
	—	NATURAL	P.A 6.6	880305 -0

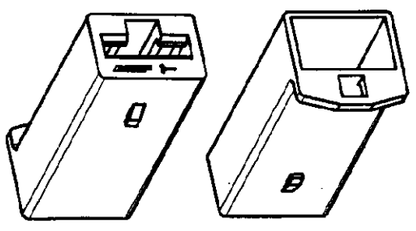

PERSPECTIVE VIEW
SCALE 2:1

THIS DRAWING IS A CONTROLLED DOCUMENT FOR AMP INCORPORATED. IT IS SUBJECT TO CHANGE AND THE CONTROLLING ENGINEERING ORGANIZATION SHOULD BE CONTACTED FOR THE LATEST REVISION.

DIMENSIONS: mm

TOLERANCES UNLESS OTHERWISE SPECIFIED:
0 PLC ±-
1 PLC ±0,5
2 PLC ±-
3 PLC ±-
4 PLC ±-
ANGLES ±1°

MATERIAL SEE TABLE
FINISH SEE TABLE

DWN N.C.LAPRESA 09DEC99
CHK P.L.FARIA 07JAN00
APVD F.ALEXANDRONI
PRODUCT SPEC -
APPLICATION SPEC -
WEIGHT -

AMP
AMP do Brasil LTDA.
São Paulo , Brasil

NAME
HOUSING, SINGLE CIRCUIT .250S. RCPT.

SIZE	CAGE CODE	DRAWING NO	RESTRICTED TO
A3	00779	C-880305	-

CUSTOMER DRAWING | SCALE 4:1 | SHEET 1 OF 1 | REV B1

ORIGINAL